Preparation to interior air quality testing at idling mode

Andrey KOZLOV
Zinaida BULYCHEVA

06.06.2018

Central scientific research
automobile and automotive
engine institute

Test aim and measured pollutants

The aim of the test is improvement of the methodology for measurement of pollutant concentration in vehicle interior air at idling mode

The list of measured pollutants in vehicle interior air under test:

- ✓ Carbon dioxide (CO_2)
- ✓ Carbon monoxide (CO)
- ✓ Nitric oxide (NO)
- ✓ Nitrogen dioxide (NO_2)

and in the exhaust gases of the tested vehicle:

- ✓ Carbon dioxide (CO_2)
- ✓ Carbon monoxide (CO)

Test aim and program

HVAC operation modes:

1. Recirculation – ON, Ventilation speed = 0 (HVAC system - OFF)
2. Recirculation – ON, Ventilation speed = maximal
3. Recirculation – OFF, Ventilation speed = maximal

The temperature inside a car is equal to ambient temperature (no heating or cooling of interior air)

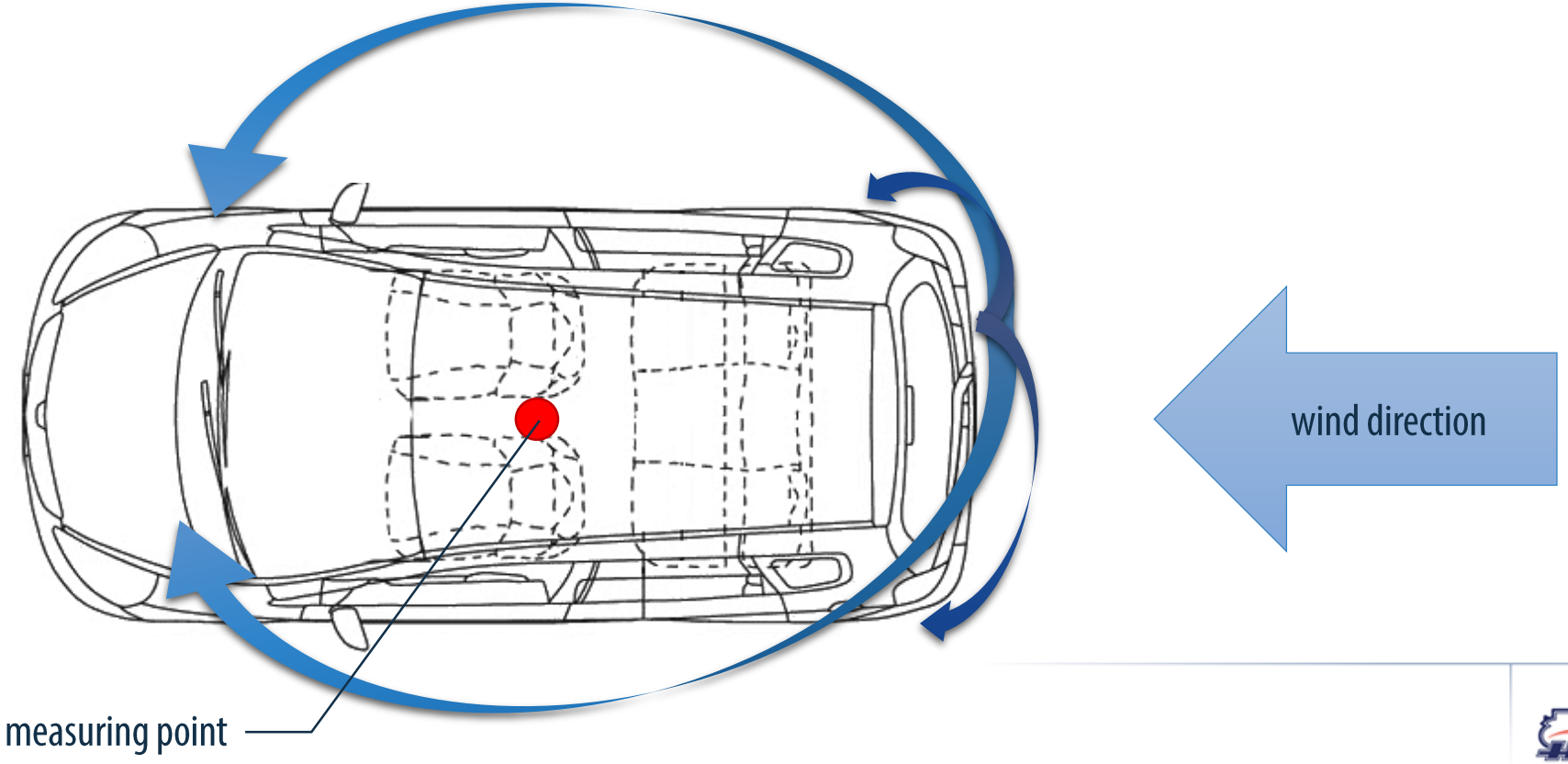

Wind speed and direction

Wind speed:

- 0 m/s
- 1 m/s
- 2 m/s
- 3 m/s
- 4 m/s
- 5 m/s

Wind direction:

- 0 deg.
- 45 deg.
- 90 deg.

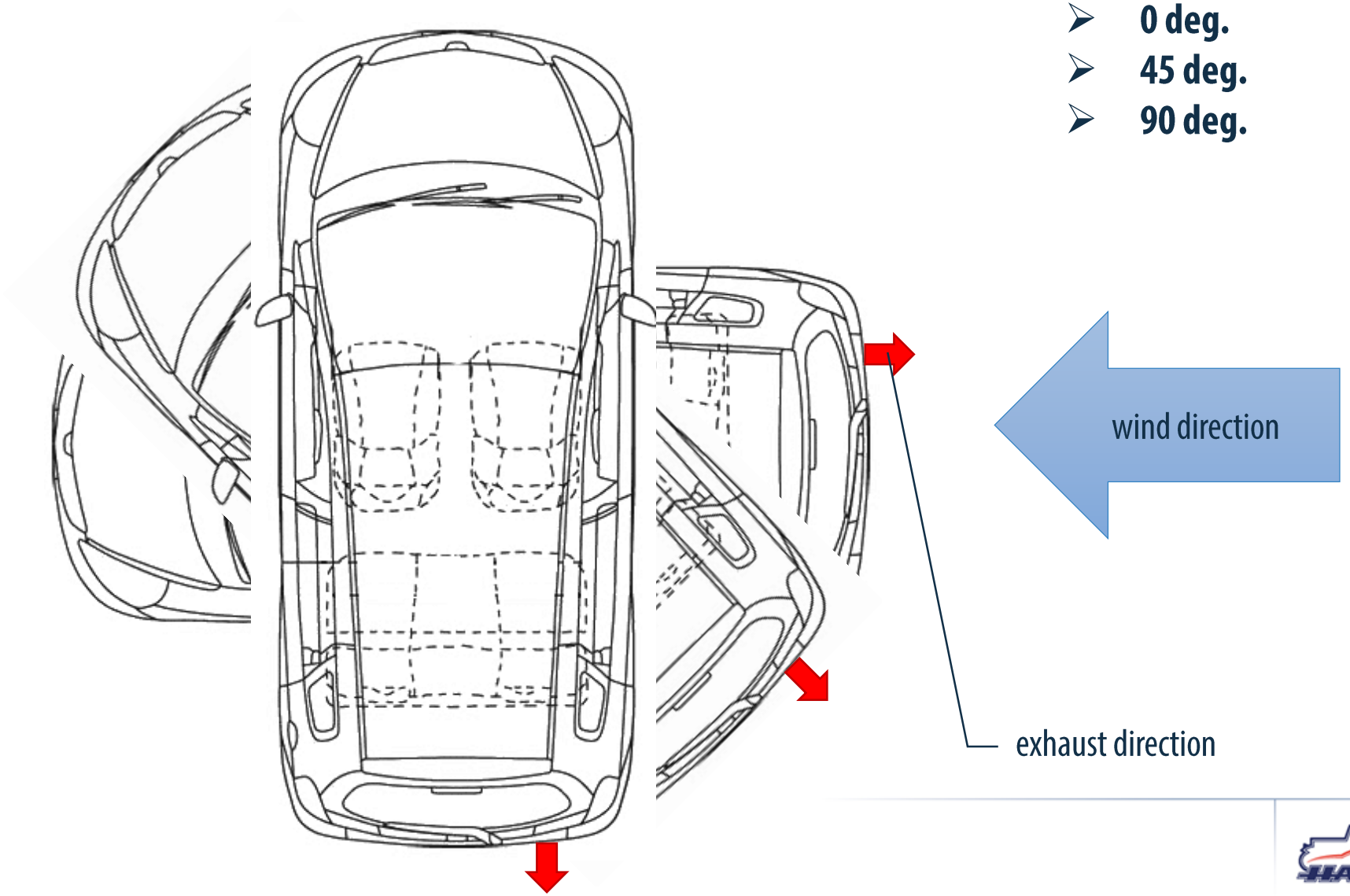

Test objects and test facility

Test objects:

1. Gasoline car
2. Diesel car

The model of the wind tunnel

Test facility: wind tunnel
Total tunnel length 120 m
Fan diameter 7.5 m
Cross-sectional area 27 m^2
Working area W/H/L 6.0/4.5/18.0 m

Test car in the wind tunnel

The test will be carried out on the Central scientific research automobile and automotive engine institute (NAMI) in it's Testing Centre - Dmitrov proving ground (Moscow region)

Measurement equipment

Measurement equipment installation inside a test car

Measurement equipment:

<u>interior air:</u>

NO,NO_2 - gasanalyzer mod. R310A()

CO - gasanalyzer mod. OPTOGAS 500-4-CO

CO_2 – gasanalyzer mod. Testo 315-3

<u>vehicle exhaust:</u>

CO,CO_2 - gasanalyzer mod. BOSCH BEA 460

Preliminary simulation results

Wind speed: 0 m/s
wind direction 0 deg.

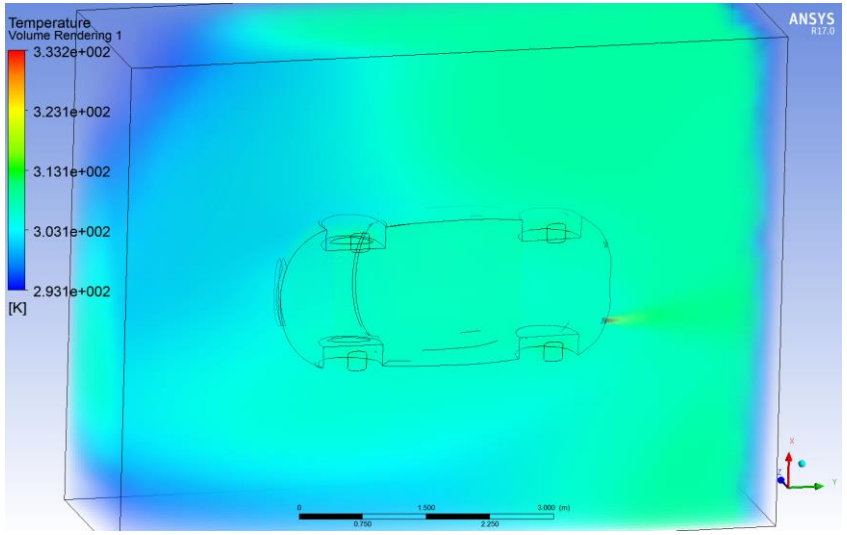

Wind speed: 1 m/s
wind direction 30 deg.

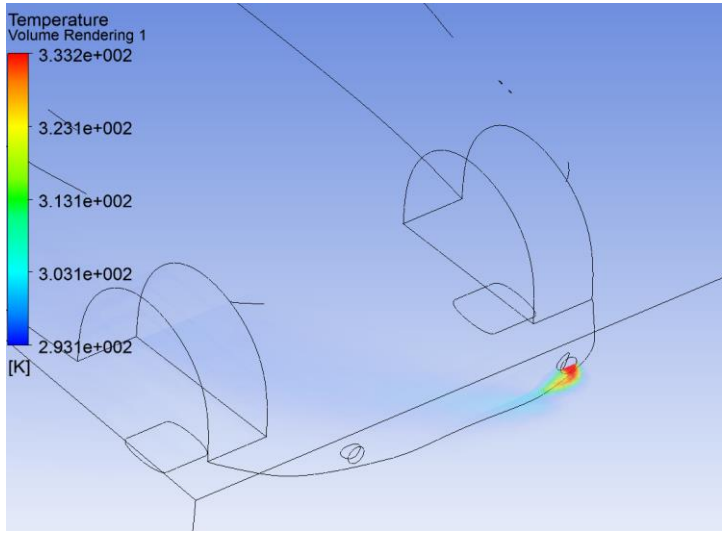

Wind speed: 1 m/s
wind direction 45 deg.

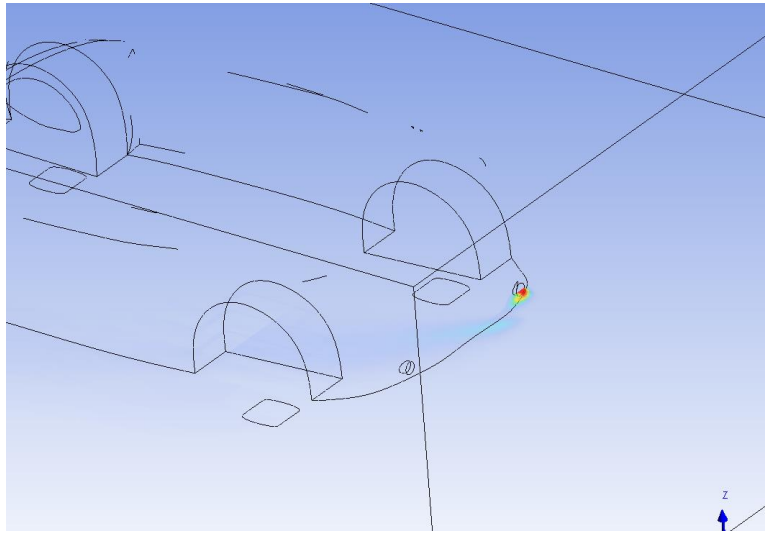

Wind speed: 1 m/s
wind direction 90 deg.

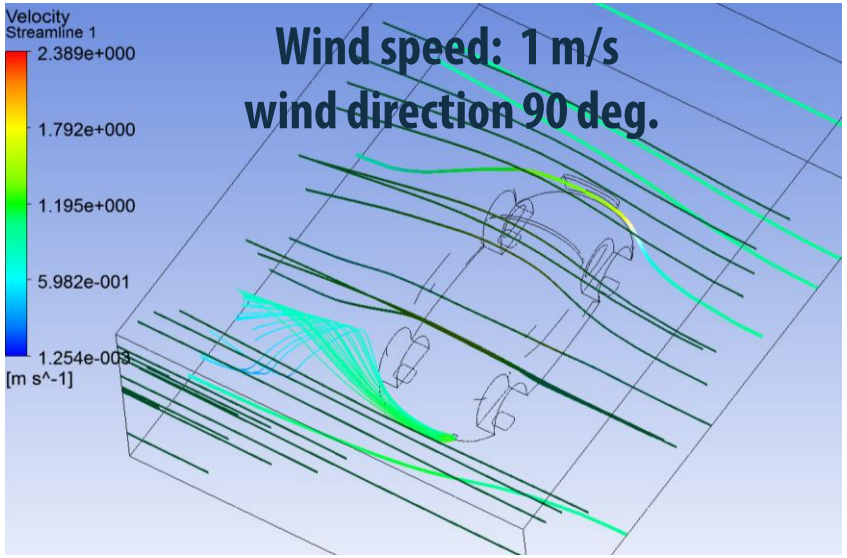

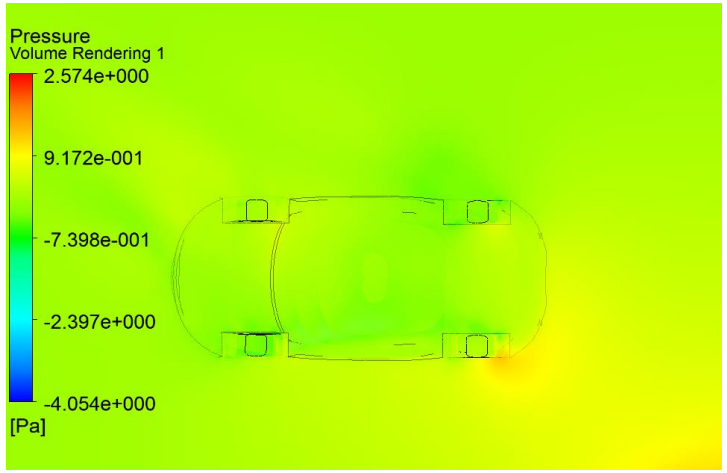

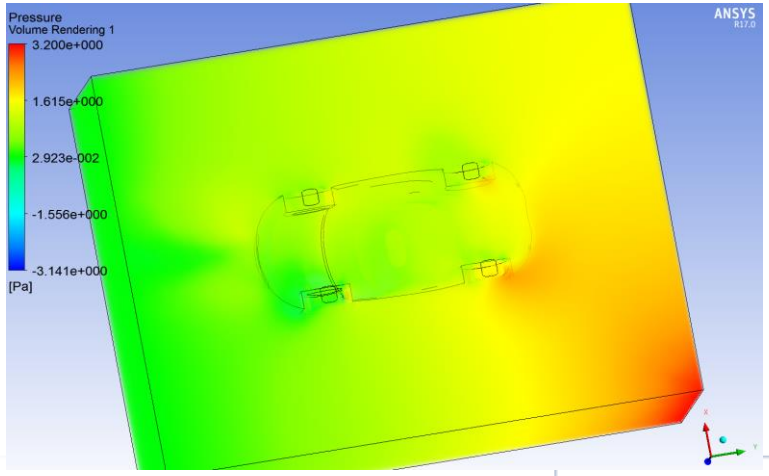

Thank you for your attention!